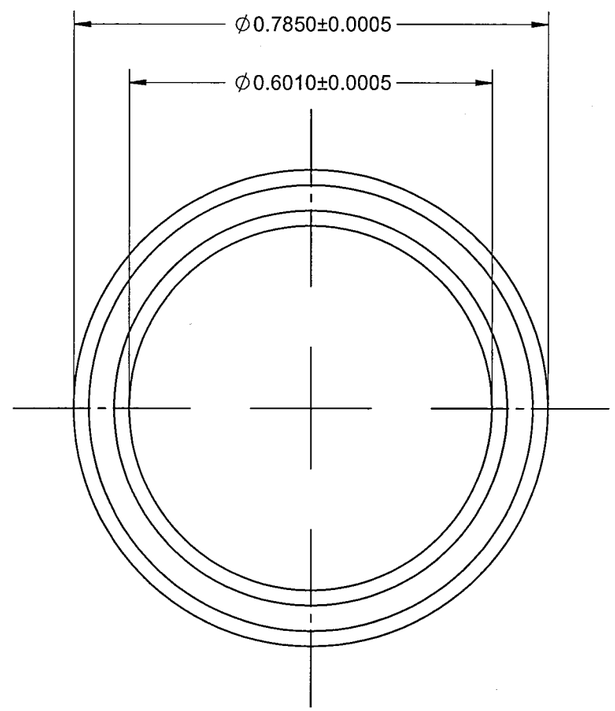

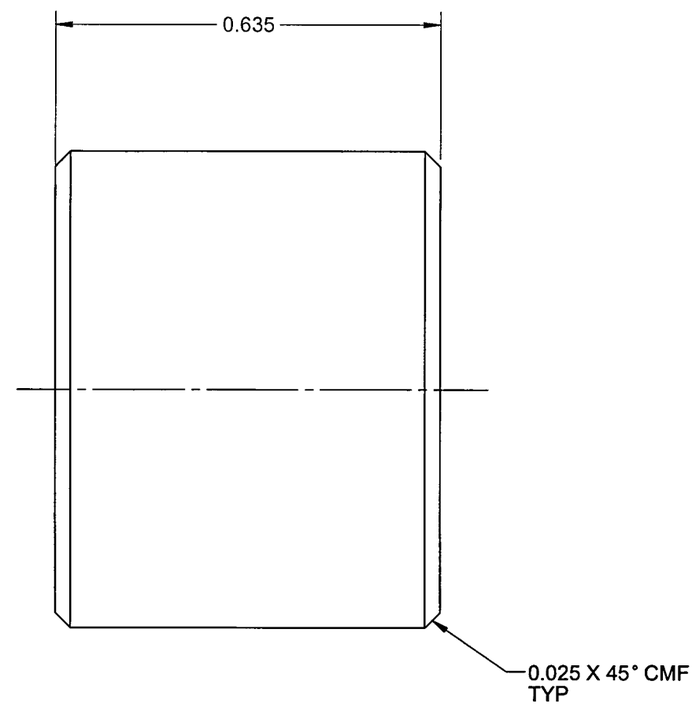

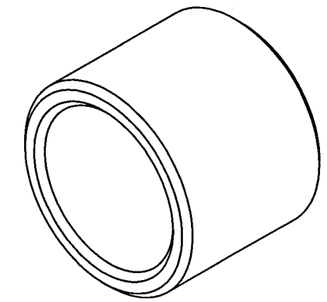

D5416-1 BUSHING

NOTES:
1) MATERIAL: AISI 303/304/316 STAINLESS STEEL ROUND BAR
PER ASTM A582 OR ASTM A276
REF DART SPEC M303R OR M304R
OR: AISI 303/304/316 STAINLESS STEEL BAR
PER ASTM A582 OR ASTM A276 OR ASTM A240
REF DART SPEC M303B OR M304B
2) FINISH: NONE
3) TOLERANCES: PER DART QSI 018 UNLESS OTHERWISE NOTED
4) UNITS: INCHES UNLESS OTHERWISE NOTED
5) BREAK SHARP EDGES: 0.005 TO 0.010 MAX
6) IDENTIFICATION: NONE
7) WEIGHT: 0.04 lbs

RELEASED
2017 -08- 01
ECN 17-607

APPROVED

REV.	DESCRIPTION	BY	DATE
A	NEW ISSUE	ML	17.05.25

DESIGN	ML	**DART AEROSPACE LTD** HAWKESBURY, ONTARIO, CANADA
DRAWN	ML	
CHECKED	JMH	DRAWING NO. D5416 — REV. A — SHEET 1 OF 1
MFG. APPR.	DD	
APPROVED	WM	TITLE: BUSHING — SCALE: NTS
DE APPR.	CP	
DATE	17.05.25	

COPYRIGHT © 2017 BY DART AEROSPACE LTD
THIS DOCUMENT IS PRIVATE AND CONFIDENTIAL AND IS SUPPLIED ON THE EXPRESS CONDITION THAT IT IS NOT TO BE USED FOR ANY PURPOSE OR COPIED OR COMMUNICATED TO ANY OTHER PERSON WITHOUT WRITTEN PERMISSION FROM DART AEROSPACE LTD.